Garda

Garda S • Garda M • Garda L

The Garda Family

Garda is a premium, decorative track-mounted spotlight collection designed to complement retail and interior spaces. Its sleek profile, high-end finishes, and customisable optical elements blend seamlessly into modern environments, offering both aesthetic appeal and exceptional lighting precision. Perfect for shops, showrooms, offices, residential, hotels and decor-focused applications, Garda transforms illumination into an essential design feature.

The Garda Family

Garda S

Garda M

Garda L

Features and benefits

- High quality precision tooled specular faceted aluminium reflector.
- Latest generation COB technology with a serviceable module.
- High Efficiency integrated track driver with High Transmission glass as standard.
- Class leading efficacy (in delivered lumens).
- Premium family of compact, stylish, and fully directional track mounted spotlights.
- Made to suit a variety of applications.
- SCDM 3

Garda S

IP20

Design

Optical head in die cast aluminium. Optical head adjustable up to 90°.
3~ track adaptor in switched or dimmable versions.

Fixture Colours

White finish
Black finish

Reflector Inserts

White trim insert
Black trim insert
Gold trim insert

Insert Options With Body Colour

Optic Options

Spot reflector
Flood reflector
Medium wide flood reflector

Control Options

Fixed output driver
Phase cut driver
Dali dimmable
Casambi Bluetooth

Lens Options

High Transmission Glass
Honeycomb Louvre

Colour Temperature

3000K CRI90
4000K CRI90

Electrical

Driver Current 200mA - 350mA
Wattage 14W

Outputs

Up to 2000lm fixture output
Up to 138lm/W efficacy

TM21 Lumen Maintenance

L70 >55,000hrs
L80 >55,000hrs
L90 34,800hrs
@50,000hrs - 0.86

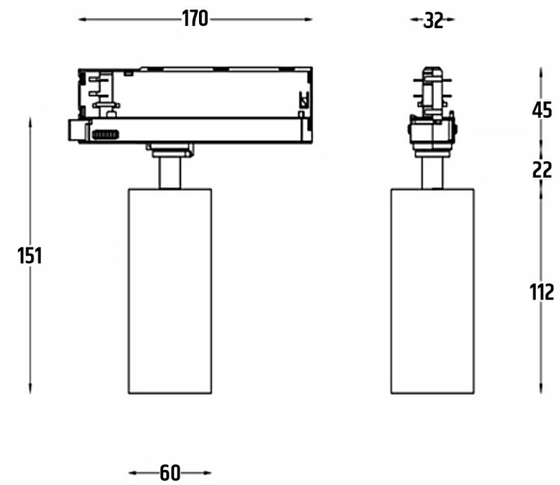

Garda Optics

Photometry from GRDTS.GW(Optic).350xx.4090A.x

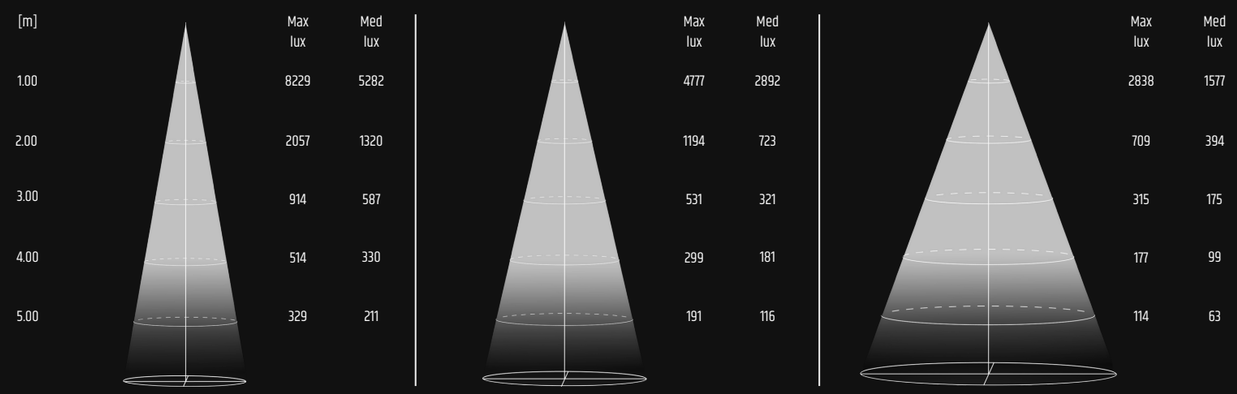

[m]	Spot Max lux	Spot Med lux	Flood Max lux	Flood Med lux	Medium-Wide Flood Max lux	Medium-Wide Flood Med lux
1.00	8229	5282	4777	2892	2838	1577
2.00	2057	1320	1194	723	709	394
3.00	914	587	531	321	315	175
4.00	514	330	299	181	177	99
5.00	329	211	191	116	114	63

Garda M

IP20

Design

Optical head in die cast aluminium. Optical head adjustable up to 90°.
3~ track adaptor in switched or dimmable versions.

Fixture Colours

White finish
Black finish

Optic Options

Spot reflector
Flood reflector
Medium wide flood reflector

Reflector Inserts

White trim insert
Black trim insert
Gold trim insert

Control Options

Fixed output driver
Phase cut driver
Dali dimmable
Casambi Bluetooth

Insert Options With Body Colour

Lens Options

High Transmission Glass
Honeycomb Louvre

Colour Temperature

3000K CRI90
4000K CRI90

Electrical

Driver Current 350mA - 500mA
Wattage 20W

Outputs

Up to 2500lm fixture output
Up to 122lm/W efficacy

TM21 Lumen Maintenance

L70 >55,000hrs
L80 >55,000hrs
L90 34,200hrs
@50,000hrs - 0.85

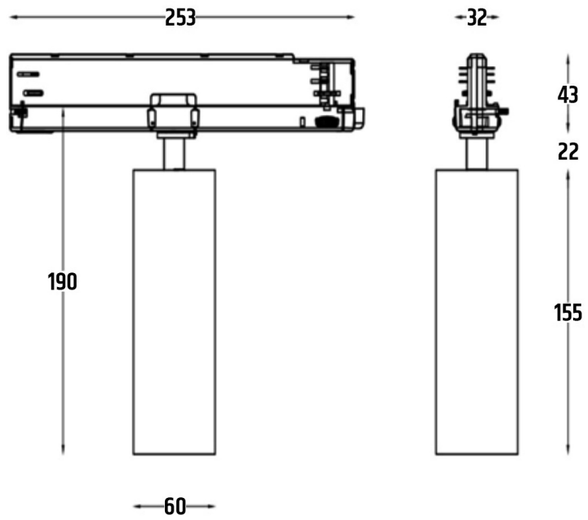

Garda Optics

Photometry from GRDTM.GW(Optic).500xx.4090A.x

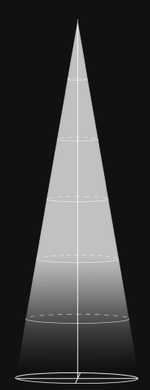

[m]	Spot Max lux	Spot Med lux	Flood Max lux	Flood Med lux	Medium-Wide Flood Max lux	Medium-Wide Flood Med lux
1.00	10333	6546	6407	3878	3858	2185
2.00	2583	1636	1602	970	964	546
3.00	1148	727	712	431	429	243
4.00	646	409	400	242	241	137
5.00	413	262	256	155	154	87

Spot

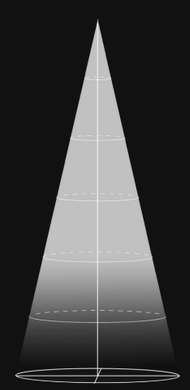

Flood

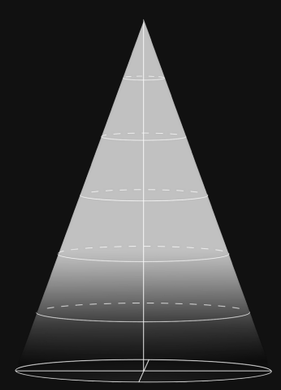

Medium-Wide Flood

Garda L

IP20

Design

Optical head in die cast aluminium. Optical head adjustable up to 90°.
3~ track adaptor in switched or dimmable versions.

Fixture Colours

White finish
Black finish

Reflector Inserts

White trim insert
Black trim insert
Gold trim insert

Insert Options With Body Colour

Optic Options

Spot reflector
Flood reflector
Medium wide flood reflector

Control Options

Fixed output driver
Phase cut driver
Dali dimmable
Casambi Bluetooth

Lens Options

High Transmission Glass
Honeycomb Louvre

Colour Temperature

3000K CRI90
4000K CRI90

Electrical

Driver Current 500mA - 800mA
Wattage 20W - 30W

Outputs

Up to 4600lm fixture output
Up to 146lm/W efficacy

TM21 Lumen Maintenance

L70 >55,000hrs
L80 >55,000hrs
L90 33,600hrs
@50,000hrs - 0.85

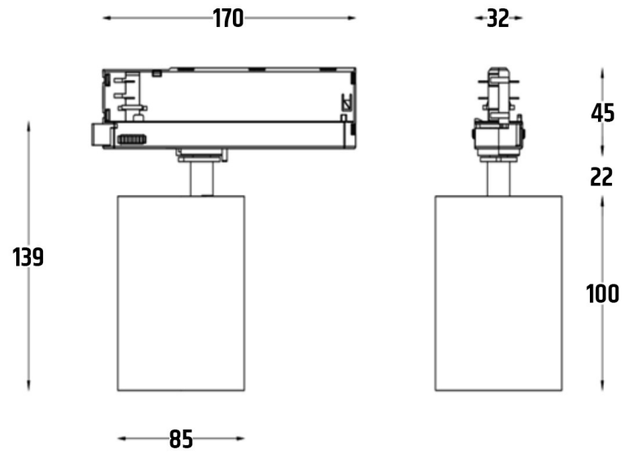

Garda Optics

Photometry from GRDTL.GW(Optic).800xx.4090A.x

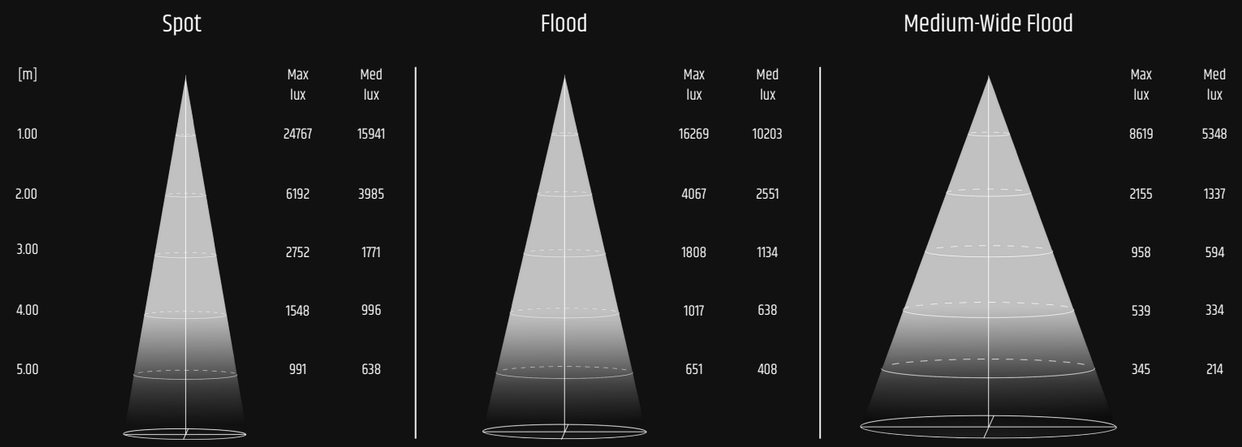

Garda Specification

Specifying a Garda can be done by listing the variations as per below:

Name | Size . Lens | Insert | Optic . Output | Driver . CCT | CRI | REF . Body Colour

Body colour key: **1** = White finish **2** = Black finish

Garda S

Name	Size	Lens	Insert Colour	Optic	Output	Driver	CCT	CRI	REF	Body Colour
GRDT	**S**	**G**	**B**	**SP**	**200**	**FO**	**30**	**90**	**A**	**1**
		H	**W**	**FL**	**350**	**DD**	**40**			**2**
			G	**MW**		**PC**				
						CS				

Garda M

Name	Size	Lens	Insert Colour	Optic	Output	Driver	CCT	CRI	REF	Body Colour
GRDT	**M**	**G**	**B**	**SP**	**350**	**FO**	**30**	**90**	**A**	**1**
		H	**W**	**FL**	**500**	**DD**	**40**			**2**
			G	**MW**		**PC**				
						CS				

Garda L

Name	Size	Lens	Insert Colour	Optic	Output	Driver	CCT	CRI	REF	Body Colour
GRDT	**L**	**G**	**B**	**SP**	**500**	**FO**	**30**	**90**	**A**	**1**
		H	**W**	**FL**	**800**	**DD**	**40**			**2**
			G	**MW**		**PC**				
						CS				

Example Sales Reference: GRDTL.GBFL.500DD.4090A.2
Description: GaRDa Track Large Glass lens Black insert FLood beam 500mA DALI Dimmable 4000K CRI Ra90 (Internal Reference: A) Black body(2)

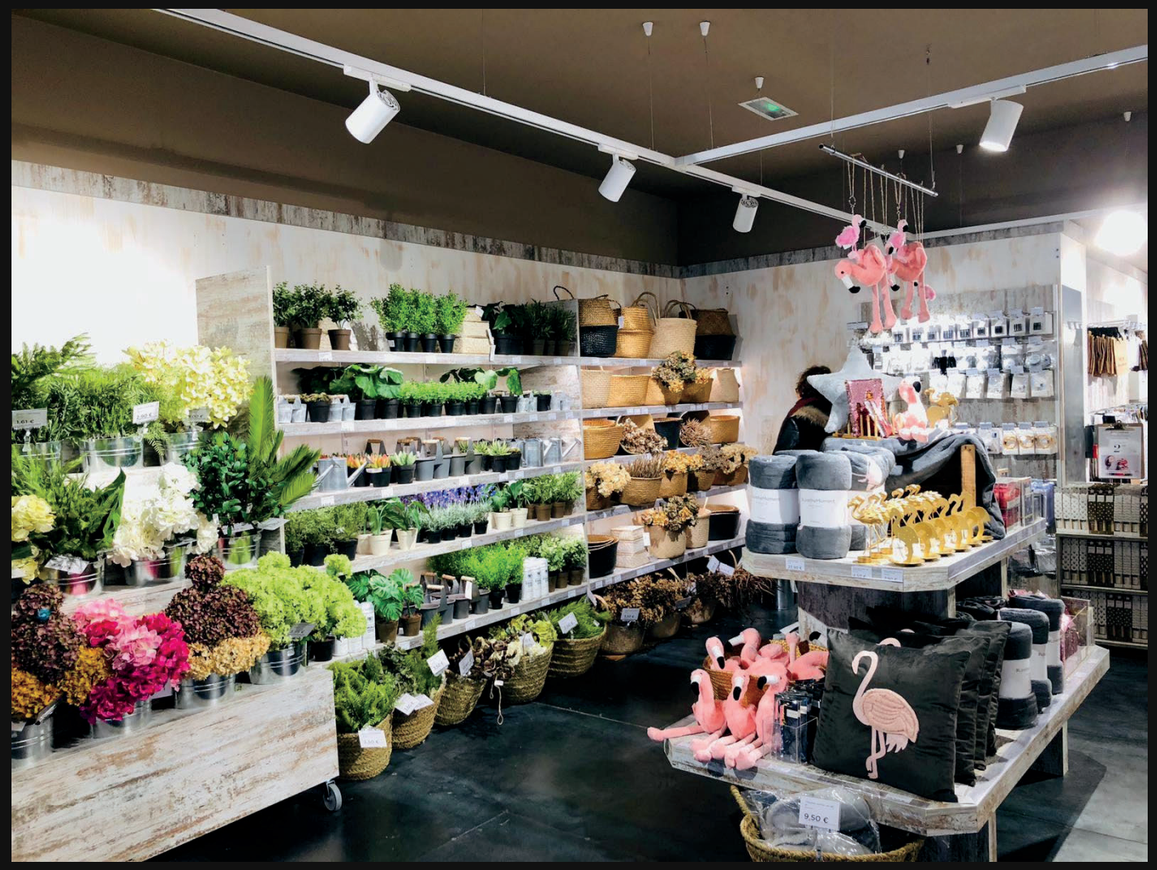

HEAD OFFICE
Via Simone Schiaffino, 11/19
20158 Milano
Tel. +39 02 36591961
Tel. +39 02 36591979
marketing@architech.it